Transactum:
1000 Parallel Instances of Workflow on a Single CPU and the Web

Ivan Klianev

Transactum Pty Ltd
WWW.TRANSACTUM.COM

HPTS 2009

TRANSACTUM

Objectives

To draw attention on:

- One long-expected direction of Web evolution
- The required for it technology
- Why it has been expected for 10 years already
- The product making it feasible

Client-Server Interaction

At present, Web interactions resemble that in a Pub:

- Visitors order from menus with limited items.
- Waiter listens and serves what's ordered.

TRANSACTUM

More Meaningful Interaction

Meaningfulness comes with:

- Functional richness
- Meaningful purpose.

Examples:

- Action-triggering in response to interaction
- Finding win-win conditions with a Peer-to-peer message interaction

TRANSACTUM

Goal-Oriented Interaction

Enables finding win-win conditions

- User (human or application) chases a personal set of goals
- Application serves its own set of objectives, related to user goals
- Both participants try to find:
  1. A common objective

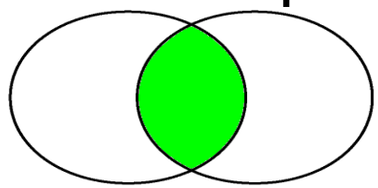

  2. A mutually acceptable solution

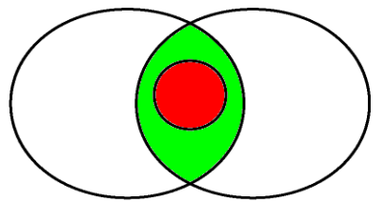

- Interaction continues until: Completed, Terminated, or Abandoned

Goal-Oriented Interaction

Examples

Future applications for:

- Price negotiation before purchasing
- Booking of complex travel plans

Transactum technology can build and run them.

TRANSACTUM

Goal-Oriented Interaction

Transactum

Has two main functional modules:

- Interaction Handling according to:
  - Interaction protocol
  - State of interactive session

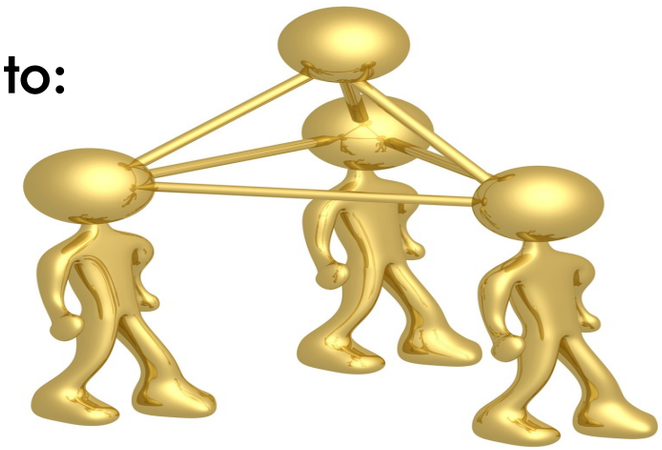

- Business Processing according to:
  - Process model
  - State of execution

TRANSACTUM

Transactum

Processing of a message

- Executes a sequence of activities

- Each activity might invoke a stateless local service

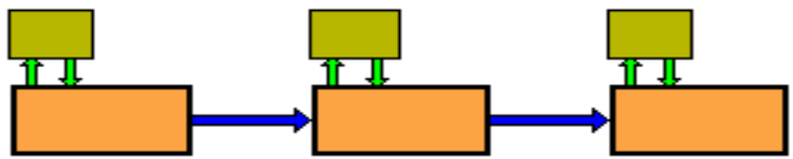

- Each activity updates a database table

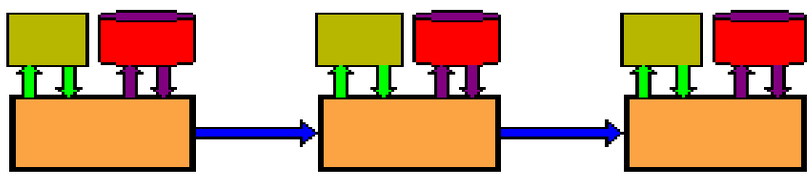

TRANSACTUM

Transactum

Web-accessibility

Provides capacity for:

- Scaling up
- Responsiveness
- Handling of 1,000+ concurrent users

TRANSACTUM

Transactum

Business process communication with partners

- Works asynchronously
- Involves transactions with database and message queuing
- Triggers repetitive execution of process segments

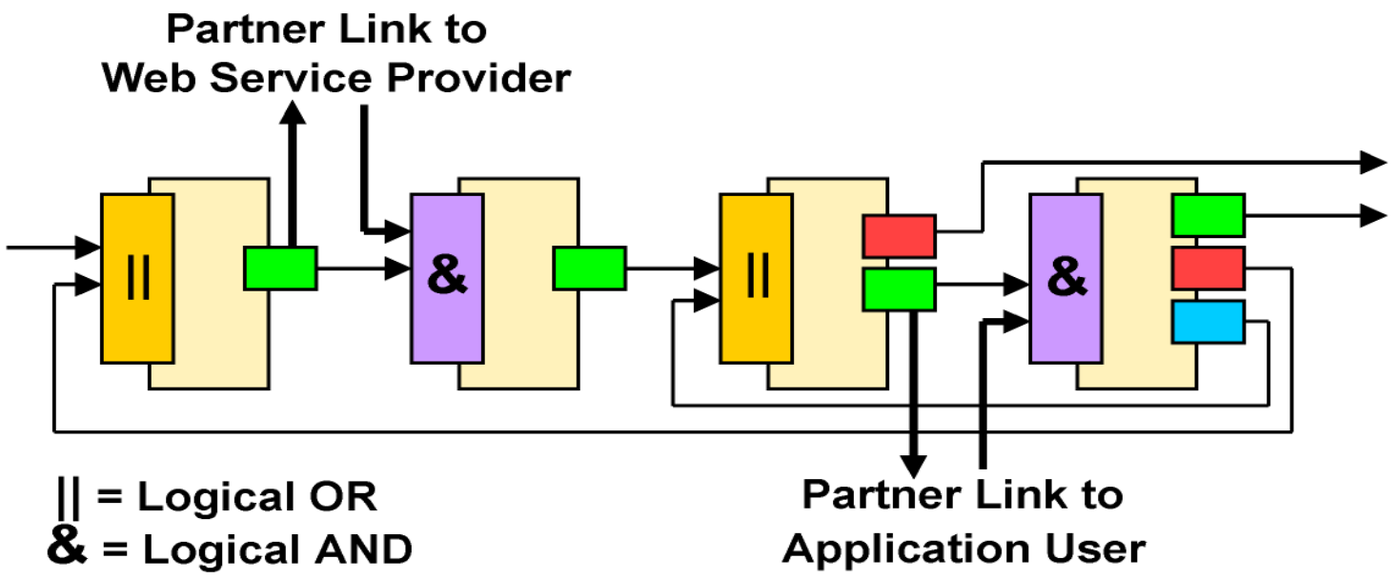

TRANSACTUM

Transactum
Workflow architecture

Comprises:

- Decomposition into activities with short transactions.
- Multiple intermediate points with a state of consistency.
- Change the state as a result of committed transaction.

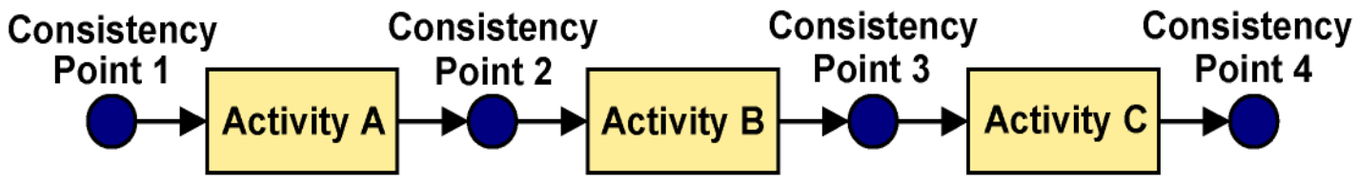

TRANSACTUM

Generic Approach

Business process uses no workflow architecture

Processing is sequential

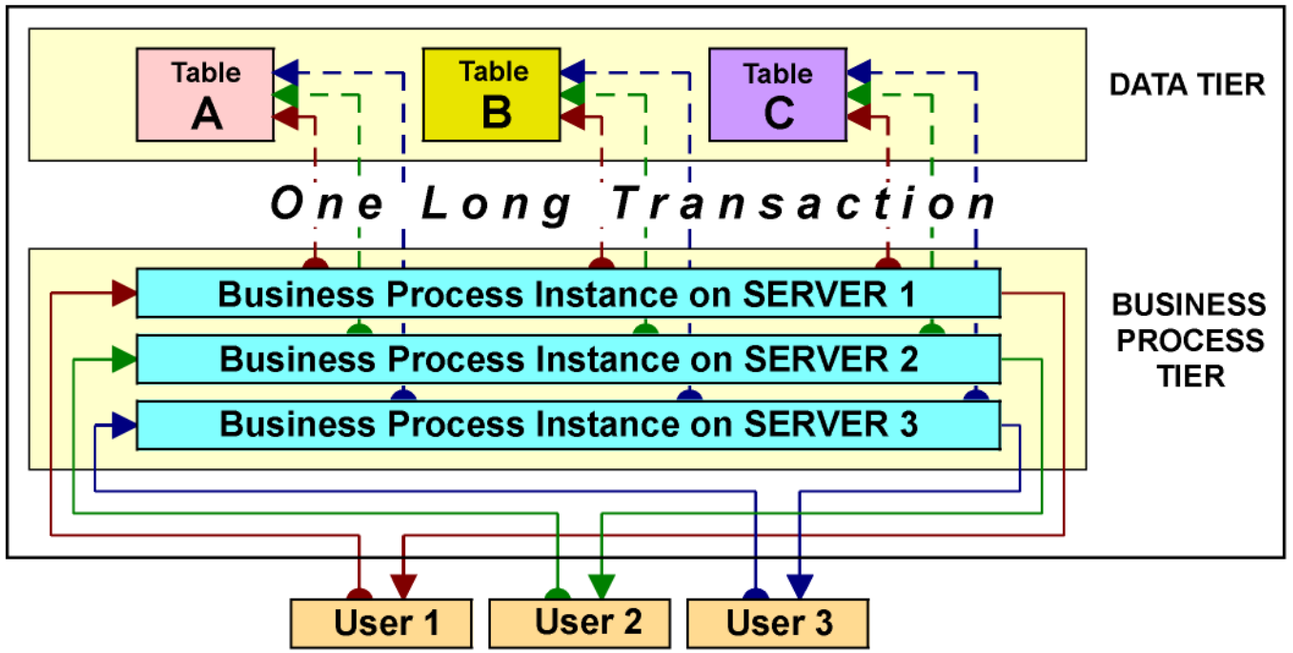

When a process instance locks tables for transaction,
All other instances wait until transaction completes.

TRANSACTUM

Transactum

Business process workflow architecture

Enables parallel processing

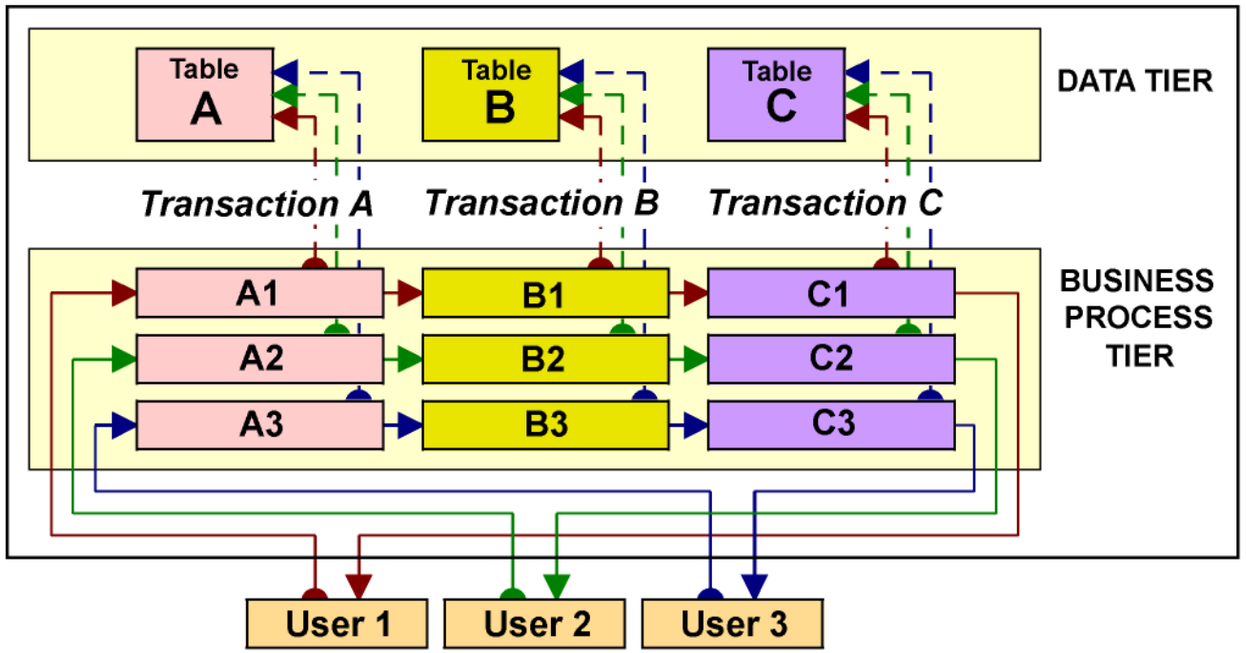

Every instance of the business process locks and updates a different table and all instances perform concurrently.

TRANSACTUM

Goal-Oriented Web Application

Summary of the Prerequisites:

- Parallel Processing for Responsiveness
- Workflow Architecture for Parallel Processing
- Workflow Concurrency for Performance

TRANSACTUM

Goal-Oriented Web Applications

Relations with Virtual Execution Engines

Vendors-recommended workflow concurrency:

- 1 per Java Virtual Machine instance
- 4 per WWF execution engine instance

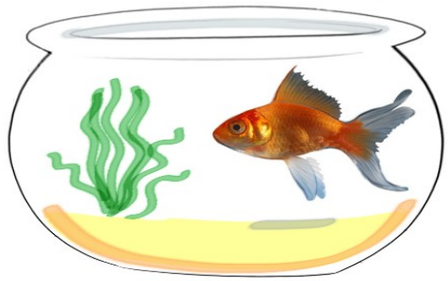

Consequently, high workflow concurrency requires:

- Large number of Engine instances
- Running on large number of CPU cores

and causes the Vicious Circle of Web workflow applications.

The Vicious Circle of
Web workflow applications

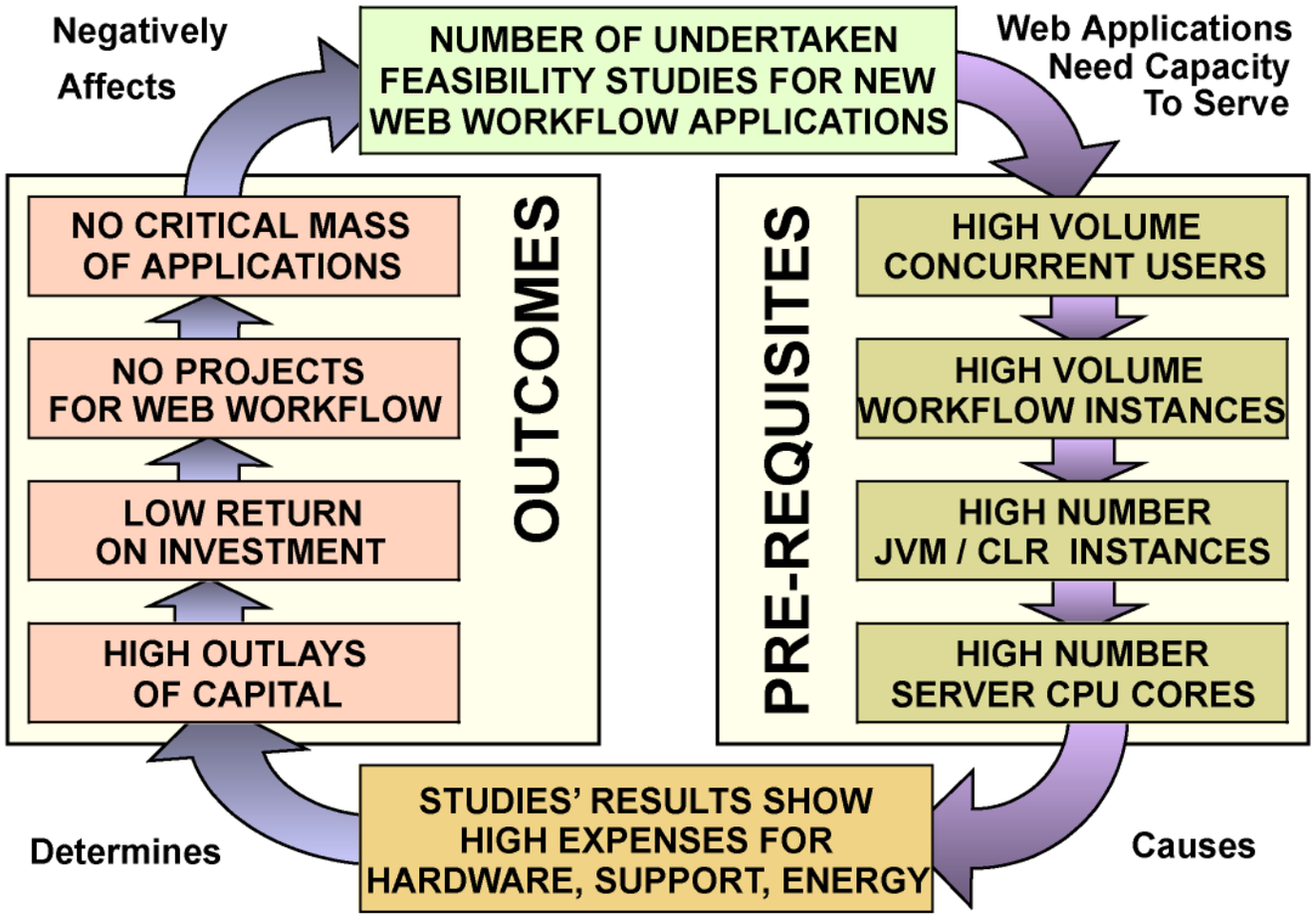

RANSACTUM

Illustration of the Vicious Circle

Unrealized Prediction of BCG

Boston Consulting Group research (published Dec 1999)

Found

80% of US executives completing online orders expect Offline negotiation to be always necessary.

Predicted

Online negotiated inter-company transactions in the US:

- $200 billion in year 2000
- $1.3 trillion in year 2004

Vicious Circle Bite

10 years later,
Commercial Web applications for Online Negotiation do not exist regardless of the readiness of end-users to accept and utilize them.

Virtual Execution Engines

As Application Server Runtime

Do not serve end-users

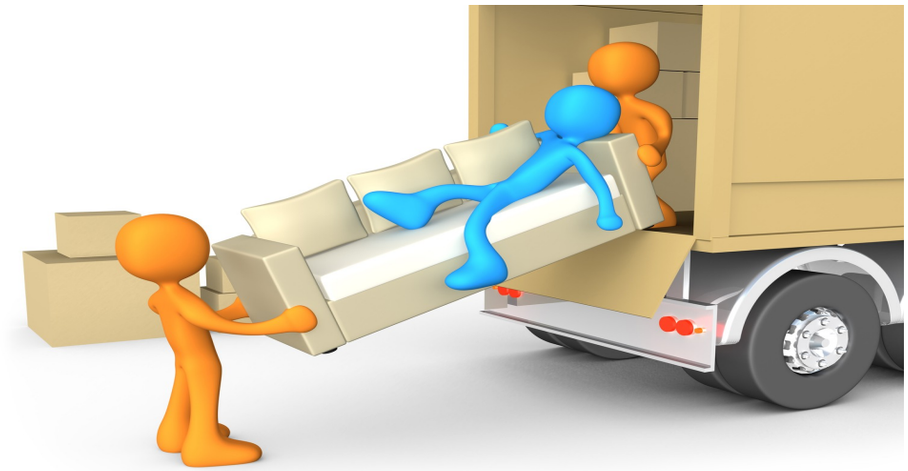

Server-side utilization of Virtual Execution Engines merits:

- Has not enabled creation of unique new technologies.
- Has not delivered any significant direct value to the end-users.

TRANSACTUM

Virtual Execution Engines

As Application Server Runtime

Contribute to global warming

"God does not play dice with the universe."
Einstein
How about humans?

Concurrency limitations of server-utilized Virtual Execution Engines:

- Generate hunger for more processing power.
- Lead to higher energy consumption.

Break of the Vicious Circle

Transactum Workflow Application Engine

Capacity to execute 1,000 concurrent instances of workflow on a single CPU

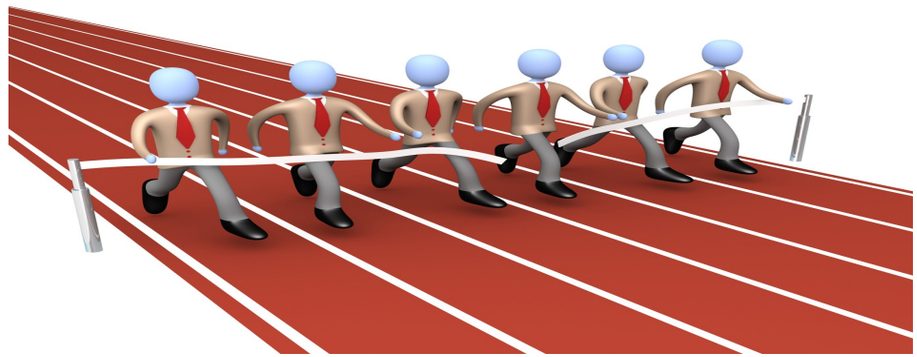

Other features:

- Built-In Workflow Parallelism
- Built-In Scaling Up and Down
- Pooled Capacity for parallel processing

TRANSACTUM

Break of the Vicious Circle
Transactum Workflow Application Engine

Other features (continued):

- One Engine Instance can run up to 8 Applications
- Multiple Engine Instances can run on one computer
  Limit is only the number of computer CPU cores

And it is not a Virtual Execution Engine.

Conclusion

Goal-oriented Web applications:

- Could be the next step of Web evolution
- Require high-performance workflow
- Become feasible with Transactum Engine

Thank You

Ivan Klianev

TRANSACTUM PTY LTD SYDNEY, AUSTRALIA WWW.TRANSACTUM.COM

TRANSACTUM